PRODUCT DATA SHEET

OSUCAS Arc Spray System

OC600Corr

with (WF4) WF6 Wire Feed Gear and OC-Mini Support Spray Device

The illustration of the system may differ depending on the version.

+49 (0) 2305-69914-20 · info@osucas.de · www.osucas.de

OSUCAS GmbH Metallspritztechnik · Erinstraße 25 · D-44575 Castrop-Rauxel

POWER SOURCE

OC600Corr

including mounted WF4 wire feed gear

The OC600Corr power source with its transformer-rectifier system has characteristic curves specially designed for arc spraying. The generously dimensioned power components ensure continuous spraying operation at 100 % duty cycle. Convection provides sufficient cooling of the power source while reducing contamination by metal dust to a minimum.

The OC600Corr is equipped with a PLC control system that monitors and controls all spray parameters. Operating faults are indicated by signal lamp codes on the power source panel and displayed in detail on the PLC display. The power source is equipped with safety devices that automatically switch the system to a safe operating state in the event of overload, overheating or pressure drop.

The compact design of the OC600Corr, combined with the large swivel and fixed castors, ensures easy manoeuvring of the power source even in harsh site conditions. Thanks to their large contact surface, the OSUCAS DC power connections provide low-loss energy transfer with minimal heat generation at the connections.

Spray current	Spray rate	Spray rate
600 A	**60 kg/h**	**18 kg/h**
100 % duty cycle	Zinc	Aluminium

The power source with a maximum spray current of 600 A (at 100 % duty cycle) stands out for:

- ✓ its compact and robust design
- ✓ easy handling with clearly legible display elements
- ✓ the clear arrangement of the controls on the inclined control panel
- ✓ large swivel and fixed castors for easy manoeuvrability, even in harsh site conditions
- ✓ optimised power connections for high energy efficiency
- ✓ the WF4 wire feed gear with its proven rubber roller system for continuous, trouble-free wire feed

Depending on the configuration, power sources can be equipped with or without WF4 wire feed gear – see text in the quotation

+49 (0) 2305-69914-20 · info@osucas.de · www.osucas.de

OSUCAS GmbH Metallspritztechnik · Erinstraße 25 · D-44575 Castrop-Rauxel

Electrical Data	
Mains voltage	3 x 400 V AC => Other mains voltages available on request
Mains voltage tolerance	± 5 %
Mains frequency	50/60 Hz
Input current	< 34.6 A
Mains fuse	63 A
Connected load	< 24 kVA
Max. spray current (at 100 % duty cycle)	600 A DC
Open-circuit voltage	26 – 39 V DC
Spray voltage	22 – 34 V DC

Spray Wires and Spray Performance	
Spray wire quality	DIN EN ISO 14919
Spray wire diameter	2.5 mm (other diameters on request)
Selection of approved spray wires and spray rates (at 380 A):	
Zn	60.0 kg/h
ZnAl	53.0 kg/h
Al	18.0 kg/h
AlMg	16.0 kg/h

Compressed Air Supply	
Required compressed air quality	DIN ISO 8573-1 Class 1
Compressed air temperature	Cooled down to min. 25 °C
Nominal diameter of compressed air ring main	25 mm (1 inch)
Nominal diameter of air hose (power source)	25 mm (1 inch)
Connection type	Compressor coupling G1/2 inch (female thread)
Max. inlet pressure	10 bar
Compressed air consumption – air motor	25 m³/h
Compressed air consumption – atomizing air	60 – 100 m³/h

Other Data	
Weight	410 kg
Protection class	IP 21
Cooling type	Convection
Test mark	CE

Dimensions

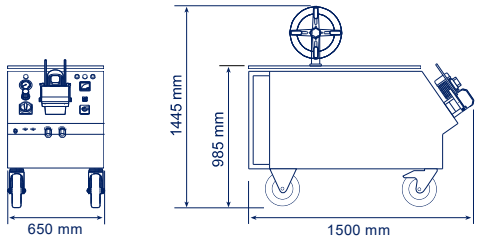

WIRE FEED

WF4 Wire Feed Gear

With its rubber roller system, the WF4 wire feed gear is used specifically for synchronous, trouble-free wire feed using the push-pull method.

The powerful asynchronous motor is completely maintenance-free and, with its fixed speed, delivers high torque. The wire feed gear supports the wire feed in the spray device, thus guaranteeing a clean and steadily burning arc.

This push-pull principle guarantees trouble-free wire feed up to a cable and hose set length of 15 m.

For greater lengths, we recommend using the **OC-Speed wire feed gear** with its slip clutch principle. This gear enables absolutely trouble-free wire feed even over long distances. When processing zinc wire, feeding the wire over up to 20 m is no problem. Stiff wires can also be processed with this gear.

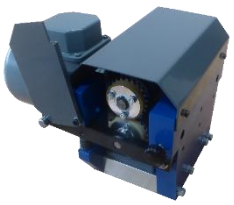

Up to 20 m
Cable and hose set (push-pull)

WF4 –Standard
8 - 15m / various gears for different materials and Ø

OC-Speed
Wire feed up to 20 m (without intermediate gear)

Features of the WF4 wire feed gear:

- ✓ powerful, maintenance-free asynchronous motor with high torque
- ✓ feed and pressure rollers made of special rubber material for synchronous, trouble-free wire feed up to a cable and hose set length of 15 m

Alternative: OC-Speed wire feed gear

- ✓ feed and pressure rollers made of hardened steel with integrated slip clutch for synchronous, trouble-free wire feed up to a cable and hose set length of 20 m

Electrical Data	
Motor supply voltage	3 x 400 V AC
Motor rated power	90 W
Other Data	
Weight	12 kg
Gear ratio	20:1

Depending on the configuration, power sources can be equipped with or without WF4 wire feed gear – see text in the quotation

+49 (0) 2305-69914-20 · info@osucas.de · www.osucas.de

OSUCAS GmbH Metallspritztechnik · Erinstraße 25 · D-44575 Castrop-Rauxel

WIRE FEED

WF6 Wire Feed Gear

With its 4-roller drive per wire, the WF6 wire feed gear is ideal for use with a spray device that has no wire feed gear of its own.

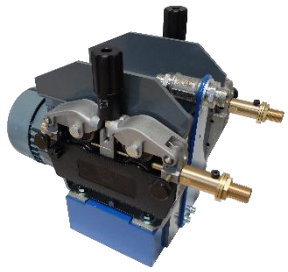

The powerful asynchronous motor is completely maintenance-free and delivers high torque over almost the entire speed range. This guarantees a constant wire feed, resulting in a clean and steadily burning arc.
The feed and pressure rollers made of hardened steel offer a long service life and are virtually wear-free in combination with soft spray wires (e.g. corrosion protection wires such as zinc, zinc-aluminium and aluminium).
They can be replaced in just a few steps without any tools. With two feed grooves, the feed rollers offer twice the service life.
The pressure levers allow the wire contact pressure to be set very precisely and thus reproducibly.

Cable and hose set length	Spray devices	Weight
4 + 1.5 m	Mini / Schub5	12 kg

Features of the WF6 wire feed gear:

- ✓ powerful, maintenance-free asynchronous motor with high torque
- ✓ Feed and pressure rollers made of hardened steel with a long service life
- ✓ Quick and easy replacement of the feed and pressure rollers

Electrical Data	
Motor supply voltage	3 x 230 V AC
Motor rated power	90 W
Other Data	
Weight	12 kg
Gear ratio	20:1 (varies depending on application/output)

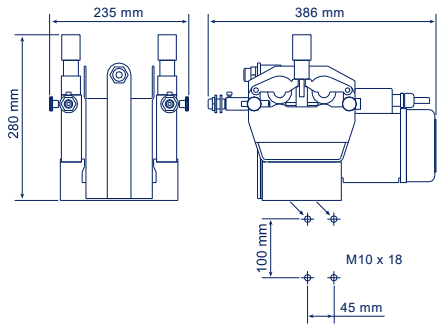

+49 (0) 2305-69914-20 · info@osucas.de · www.osucas.de
OSUCAS GmbH Metallspritztechnik · Erinstraße 25 · D-44575 Castrop-Rauxel

SPRAY DEVICE

OC-Mini (Support Spray Device)

With its closed nozzle system, the OC-Mini/Schub5 Support Spray Device is ideal for processing corrosion protection wires. The special geometry of the nozzle system components enables very fine atomization of the molten particles, resulting in a correspondingly fine spray coating with low surface roughness.

The OC-Mini spray device is consistently designed for low weight without compromising on durability. In combination with the WF6 wire feed gear and a standard cable and hose set length of 4 + 1.5 m, it is perfectly suited for integration into automated / semi-automated spraying processes.

OC-Mini

The OSUCAS DC power connections provide low-loss energy transfer with minimal heat generation and improved conductivity. This keeps the energy where it belongs – in the spraying process.

600 A	4 + 1.5 m	1.1 kg
Max. current (100 % duty cycle)	Standard cable/hose length	without cable and hose set

OC-Mini – compact, light, robust (Support Spray Device):

- ✓ housing made of fibre-reinforced material for a long service life
- ✓ compact design and very low weight
- ✓ Ideal for integration into automated work processes
- ✓ Robust and easily adaptable clamping holder for a reliable spraying process
- ✓ Optimised power connections for high energy efficiency
- ✓ Special wire guides for flawless wire feed
- ✓ Minimal wear part requirements, as no feed unit is needed in the spray device

+49 (0) 2305-69914-20 · info@osucas.de · www.osucas.de

OSUCAS GmbH Metallspritztechnik · Erinstraße 25 · D-44575 Castrop-Rauxel

Spray Wires and Spray Performance	
Spray wire quality	DIN EN ISO 14919
Spray wire diameter	2.5 mm (other diameters on request)
Max. spray current (at 100 % duty cycle)	600 A

Compressed Air Supply	
Required compressed air quality	DIN ISO 8573-1 Class 1
Compressed air temperature	Cooled down to min. 25 °C
Compressed air consumption – air motor	25 m³/h
Compressed air consumption – atomizing air	60 – 100 m³/h

Other Data	
Weight	1.1 kg (without cable and hose set)
Air motor power	320 W

Dimensions (hand-held spray device)

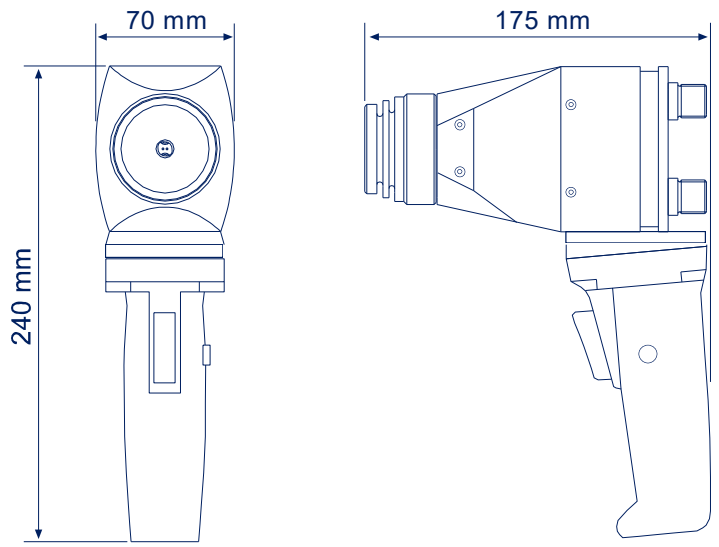

Dimensions (Support Spray Device)

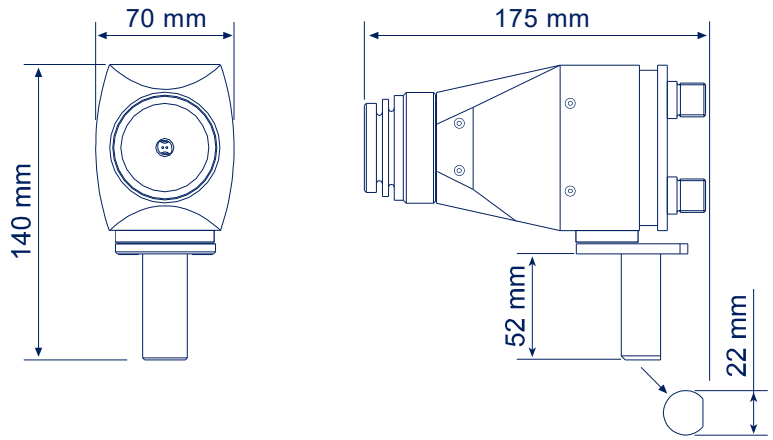

ACCESSORIES

Optional Accessories

Combi uncoiling device

for processing wire on spools

The uncoiling device is mounted directly on the power source, enabling mobile use, e.g. on construction sites.

Our new Combi uncoiling device gives you the flexibility to use wires on all available spool types (reel, mandrel and basket spools). With just a few simple steps, you can convert this uncoiling device to the spool type of your choice in no time.

Drum cover with de-coiling device

for processing endless wire from drums

The drum cover protects the wire in the drum from dust and other contamination. The de-coiling device is mounted directly on the cover.

The drum cover is made of robust, transparent material that provides an overview of the amount of wire in the drum at all times. An access opening covered with a rubber flap allows the wire to be threaded in easily.

The drum cover fits drum diameters of 505 - 574 mm (variably adjustable).

Mobile wire feed trolley

to extend the working radius by up to 40 m

The OSUCAS wire feed trolley with integrated wire feed gear was specially developed for applications that require a large working radius – as is typical in corrosion protection.

Depending on requirements, it is available either with a Combi uncoiling device for spools or for use with wire in drums.

By integrating the wire feed trolley into the respective standard setup of the system, total cable and hose set lengths of up to 40 m can be achieved – depending on the material being processed.

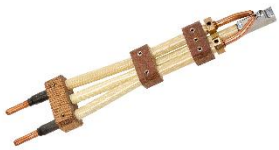

Angled nozzle extension

for coating hard-to-reach areas

The angled nozzle extension is a spray extension for the internal coating of pipes as well as for coatings in hard-to-reach areas. It is attached to the spray device with a suitable adapter (instead of the spray head).

Available in different lengths and with various adapters.